Ralotherm Infrared Lamp with cable

ITT 2500W 235V-0826 K/S

Radium

Product Datasheet Date: 19.10.2025

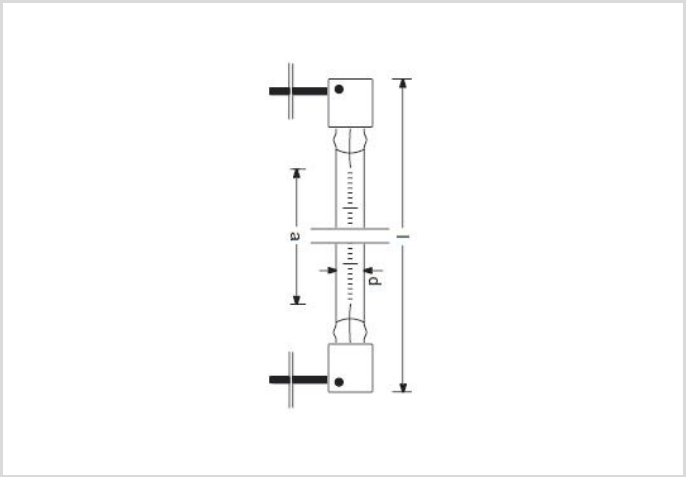

2400K 5 000h Dimmable

General Data

Article No.	24317403
Code	ITT 2500W 235V-0826 K/S
Product EAN	4008597174032
Box quantitiy (pcs.)	12
EAN Box	4008597474033
Gross weight of box in kg	0.974
Length of box in m	0.389
Width of box in m	0.127
Height of box in m	0.087
Product weight	56 g
Product status	Active

Electric Parameters

Lamp power	2,500.0 W
Weighted energy consumption in 1000 hours	2500 kWh
Lamp voltage	235-235 V
Nominal current (A)	10,6 A

Ralotherm Infrared Lamp with cable

ITT 2500W 235V-0826 K/S

Radium

Light Application Parameters

Color temperature	2400 K

Service Life

Average life	5000 h

Specification

Diameter	11 mm
Length max.	351 mm
Total length max.	351 mm
Burning position	p15
Lamp shape	Other
Base	cable

Notes on Operation

Burning position	p15

Notes

Highly efficient infrared lamp for mains voltage 230V, double ended, controllable, long service life, no ramp-up-time - quick heating up

Please, refer to www.radium.de/recycling for notes on disposal of burned-out lamps as well as lamp breakage.
The field 'info about service life' contains the frame conditions according to standards based on which the specific service life has been determined. So, for example, "12B50, 50Hz" means that the mean service life (B50) has been determined with a 12h switching cycle at mains (frequency 50Hz), "3B50, HF" is based on a 3h switching cycle at electronic control gear (high frequency).

Spectrum

As daylight is a mixture of direct sunlight and light from the sky, the spectral distribution changes all the time due to the time of the day and the weather. The standard illuminant D65 corresponds to daylight with colour temperature of about 6500K.
Incandescent an halogen lamps emit a continouus red-dominated spectrum of electromagnetic radiation as it is generated by heating up a tungsten filament. The wavelength range of visisble light reaches from 380 to 780 nm, above (longer wavelength) there is infrared radiaiton which can be used for targeted heat generation.
The addition of halogens to the filling gas enhances the efficiency and prevents blackening. Further increase in effiency can be achieved by adding Xenon and/or specific coating.

Special features

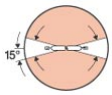

General notes

The technical design data in accordance with DIN and IEC. The producer does not take any responsibility for damage to persons or property in case of unsuitable operation or handling of the product. Operating data and dimensions are valid within the usual tolerances. Related lamp types (different bases, mains voltages) may be available on request. Sale and delivery are effected in accordance with the Radium Terms of Delivery and Payment valid on the day of conclusion of contract. Packing units offer economical advantages to the purchase and logistic department. Please match your quantity volume accordingly. For orders of a minimum quantity (clefts) with a lamp model the amount lower than the volume of each packaging unit, we will invoice 10 % additional charge per lamp type. Technical changes and terms of delivery are reserved. Manipulation of any kind to packaging or

product is not permissible as this will violate Radium brand rights. Furthermore, technical properties of the product can change to its disadvantage or even destruction. Therefore, Radium cannot be responsible for consequential damages.
® = Registered trademark
Subject to change without notice. Errors and omissions excepted.

All technical data without guarantee.